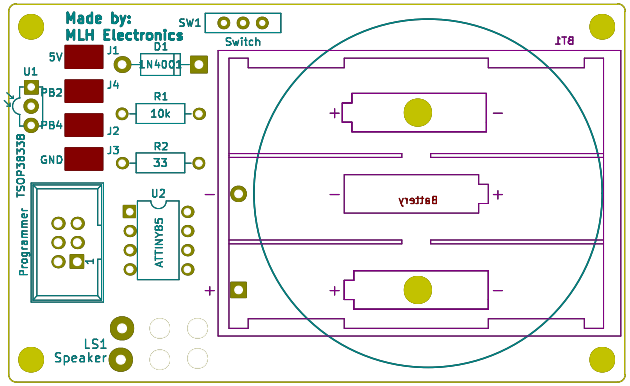

Sheet:
File: beepkit.kicad_pcb

Title:

Size: A4	Date:	Rev:
KiCad E.D.A. kicad 4.0.6-e0-634953ubuntu16.04.1		Id: 1/1